Wooden plates (RAL 7031)

1435-24-7 EWK (Festudlejning)

Interior height 2100

PVC - BLACK

RUKO

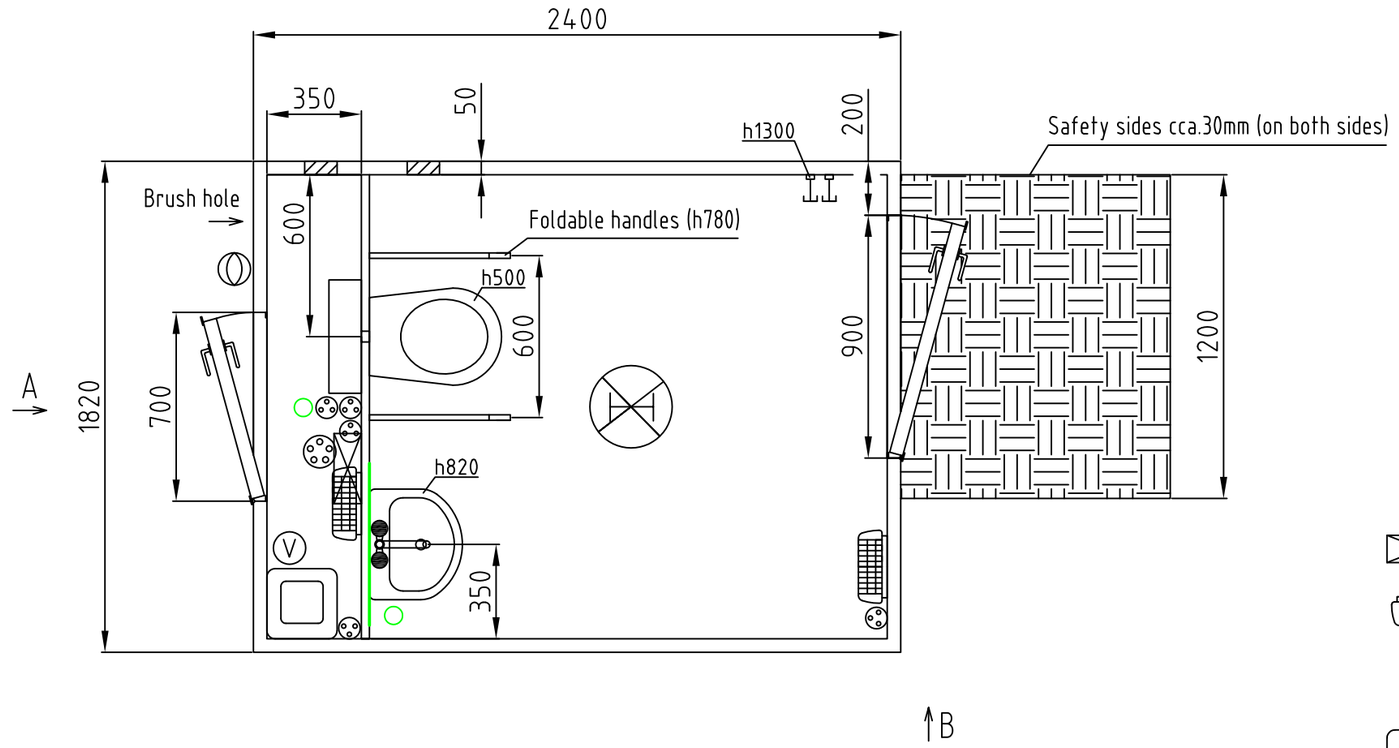

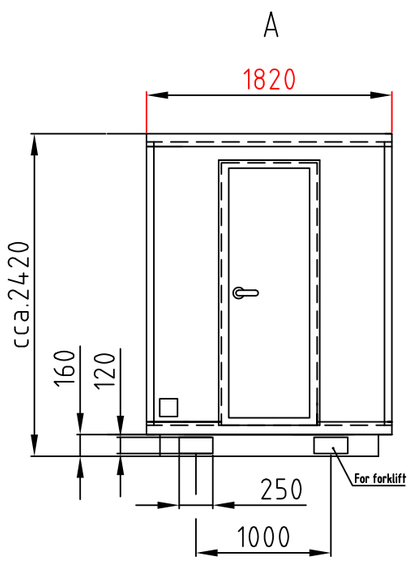

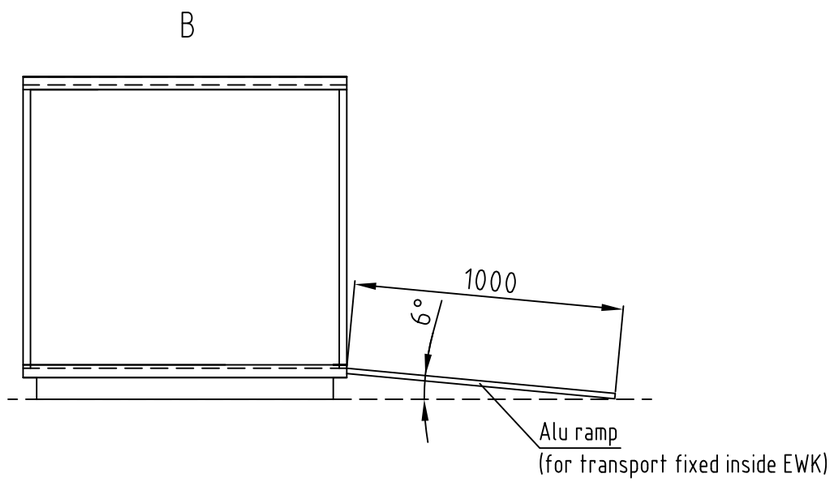

- Water connection 1/2" (through the wall)
- Electric connection (throught the wall) (230V-16A)
- Effluent connection Ø110 (through wall)
- Power point
- Switch board (1300 over floor)
- Heating (500W)
- Sensorlight
- Hot water boiler GT5U (5l)
- Ventilation
- Mirror (600x600)
- Wash-basin (410x350) + standard water tap
- Hanging toilet
- Floor drain hole

COPYRIGHT EUROWAGON.DK®

22.8.2017